Ordering Information:

PRC182X – 61 – 4 – Y02

Key:	HVIL:	Cable Size:	Salt spray:
X Orange	0 No HVIL	2.5=2.5mm²	Default: 96 hour
Y Black	1 HVIL	4=4mm²	Y01: 336 hour
U Yellow		6=6mm²	Y02: 480 hour
V Green		10=10mm²	

Specification:

1. Operation Temp: −40℃~+125℃.
2. Opearting Current: 60A (Max) .
3. Operating Voltage: 1500 VDC. 500 VDC (HVIL)
4. <S/C>▲ Withstanding Voltage: 6000VDC & 4000VAC. 500 VAC (HVIL)
5. ▲ Insulation Resistance: 2GΩ. 500 MΩ (HVIL)
6. Contact Resistance: <2mΩ.
7. <S/C>▲ Protection Level: IP68 & IP6K9K & IPXXB & IPXXD
8. Durability: 100 Min.
9. EMC.
10. with Auto–secondary lock system.
11. with HVIL.
12. Fire protection grade: UL94 V–0.
13. Mating Rcpt: "PRC082–61" .

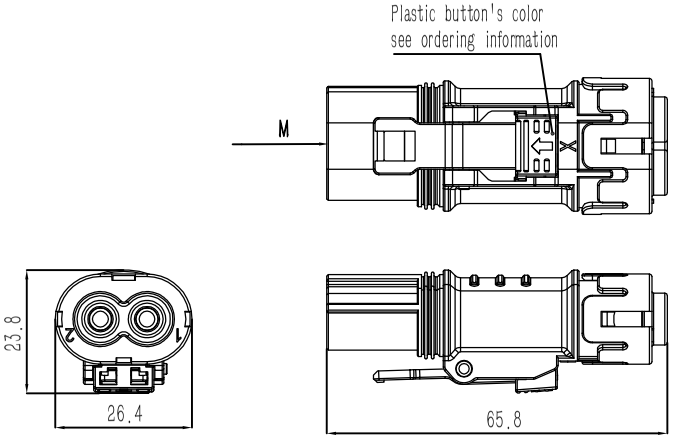

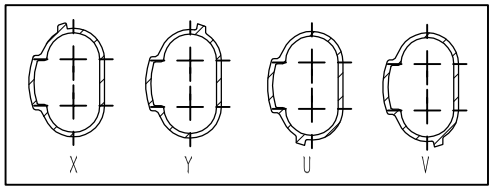

Sketch map for key in M direction

CUSTOMER DRAWING

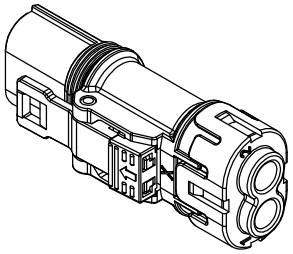

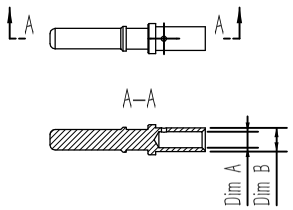

P/N–cable size	Dim A	Dim B
PM04–2.5	2.50±0.1	4.00±0.05
PM04–4	3.05±0.1	4.57±0.05
PM04–6	3.80±0.1	5.80±0.05
PM04–10	4.80±0.1	6.80±0.05

Product with HVIL			Product without HVIL		
P/N	Product Description	Cable OD.	P/N	Product Description	Cable OD.
PRC182X–61–2.5	PRC60A 2pos sperated Plug, Key X, 2.5mm^2,with HVIL	5.2±0.2	PRC182X–60–2.5	PRC60A 2pos sperated Plug, Key X, 2.5mm^2,w/o HVIL	5.2±0.2
PRC182Y–61–2.5	PRC60A 2pos sperated Plug, Key Y, 2.5mm^2,with HVIL		PRC182Y–60–2.5	PRC60A 2pos sperated Plug, Key Y, 2.5mm^2,w/o HVIL	
PRC182U–61–2.5	PRC60A 2pos sperated Plug, Key U, 2.5mm^2,with HVIL		PRC182U–60–2.5	PRC60A 2pos sperated Plug, Key U, 2.5mm^2,w/o HVIL	
PRC182V–61–2.5	PRC60A 2pos sperated Plug, Key V, 2.5mm^2,with HVIL		PRC182V–60–2.5	PRC60A 2pos sperated Plug, Key V, 2.5mm^2,w/o HVIL	
PRC182X–61–4	PRC60A 2pos sperated Plug, Key X, 4mm^2,with HVIL	5.8±0.2	PRC182X–60–4	PRC60A 2pos sperated Plug, Key X, 4mm^2,w/o HVIL	5.8±0.2
PRC182Y–61–4	PRC60A 2pos sperated Plug, Key Y, 4mm^2,with HVIL		PRC182Y–60–4	PRC60A 2pos sperated Plug, Key Y, 4mm^2,w/o HVIL	
PRC182U–61–4	PRC60A 2pos sperated Plug, Key U, 4mm^2,with HVIL		PRC182U–60–4	PRC60A 2pos sperated Plug, Key U, 4mm^2,w/o HVIL	
PRC182V–61–4	PRC60A 2pos sperated Plug, Key V, 4mm^2,with HVIL		PRC182V–60–4	PRC60A 2pos sperated Plug, Key V, 4mm^2,w/o HVIL	
PRC182X–61–6	PRC60A 2pos sperated Plug, Key X, 6mm^2,with HVIL	6.7±0.2	PRC182X–60–6	PRC60A 2pos sperated Plug, Key X, 6mm^2,w/o HVIL	6.7±0.2
PRC182Y–61–6	PRC60A 2pos sperated Plug, Key Y, 6mm^2,with HVIL		PRC182Y–60–6	PRC60A 2pos sperated Plug, Key Y, 6mm^2,w/o HVIL	
PRC182U–61–6	PRC60A 2pos sperated Plug, Key U, 6mm^2,with HVIL		PRC182U–60–6	PRC60A 2pos sperated Plug, Key U, 6mm^2,w/o HVIL	
PRC182V–61–6	PRC60A 2pos sperated Plug, Key V, 6mm^2,with HVIL		PRC182V–60–6	PRC60A 2pos sperated Plug, Key V, 6mm^2,w/o HVIL	

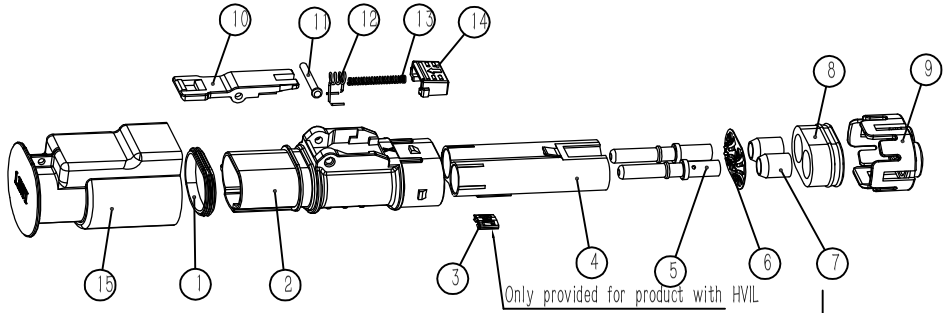

No.	Part name	Material	QTY
15	2pos plug dust cap	PP	1
14	Plastic button	PA66	1
13	Pressing Spring	Stainless Steel	1
12	Torsional Spring	Stainless Steel	1
11	Pin	Brass	1
10	Metal button	2# Zinc Alloy	1
9	Seprated Plug rear Cover	PA66(Key X_Orange; Key Y_Black; Key U_Yellow; Key V_Green)	1
8	Rear sealing part	Flame Retardant Silicone Rubber (2.5mm^2_Yellow; 4mm^2_Red; 6mm^2_Green;)	1
7	Shiedling copper sleeve	Brass	2
6	Plug gasket	Phosphor bronze	1
5	Terminal	Red Copper	2
4	Plug inner plastic part	PBT(Key X_Orange; Key Y_Black; Key U_Yellow; Key V_Green)	1
3	HVIL contact	Beryllium copper	1
2	Plug Shell	5# Zinc Alloy	1
1	Sealing ring	FKM Black	1

REVISIONS					
REV	ECN#	DESCRIPTION	REV.BY	APPR.BY	DATE
A1	- -	Initial release	W.FS	M.D	2023/6/2
B	ECN-2023-001	Change parameters	W.FS	M.D	2024/1/22

BALE

Chengdu City Bale New Energy Technology Co. Ltd

SIGNATURE		DATE	SHEET	No tolerance(mm):	CUST P/N:
DRAWN	W.FS		1/3	x.: ±1.0 x..: ±0.5 x...: ±0.2	SEE TABLE
CHECKED	M.D		ANGLE OF VIEW	Angle: ±2°	DWG NO: PRC182-61
APPROVAL	M.D				

WEIGHT | MATERIAL: / | PART NAME: PRC60A 2 POS SEPRATED PLUG

THE COPYRIGHT BELONGS TO BALE

REVISIONS					
REV	ECN#	DESCRIPTION	REV.BY	APPR.BY	DATE
A1	- -	Initial release	W.FS	M.D	2023/6/2
B	ECN-2023-001	Change parameters	W.FS	M.D	2024/1/22

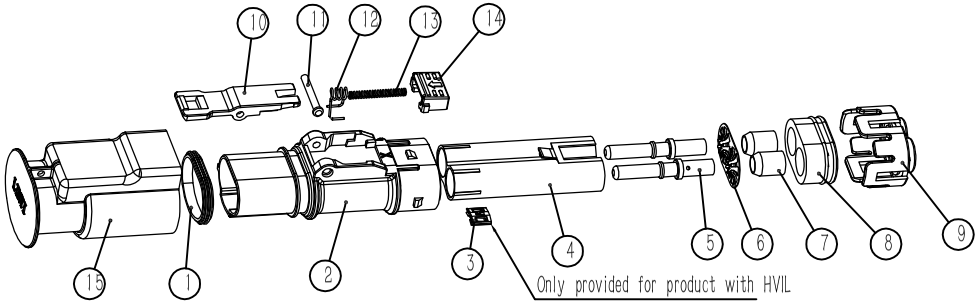

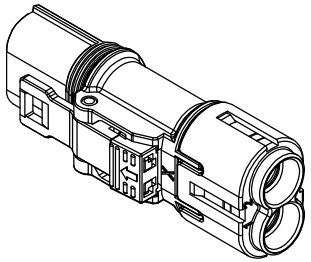

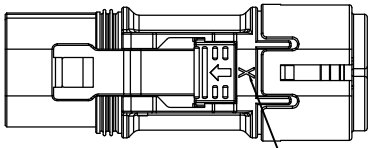

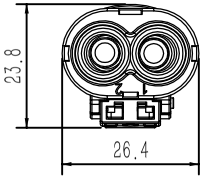

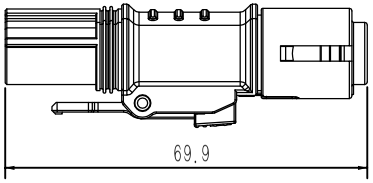

Product with HVIL			Product without HVIL		
Part No.	Product Description	Cable OD.	Part No.	Product Description	Cable OD.
PRC182X-61-10	PRC60A 2pos sperated Plug, Key X, 10mm^2,with HVIL	9.4±0.3	PRC182X-60-10	PRC60A 2pos sperated Plug, Key X, 10mm^2,w/o HVIL	9.4±0.3
PRC182Y-61-10	PRC60A 2pos sperated Plug, Key Y, 10mm^2,with HVIL		PRC182Y-60-10	PRC60A 2pos sperated Plug, Key Y, 10mm^2,w/o HVIL	
PRC182U-61-10	PRC60A 2pos sperated Plug, Key U, 10mm^2,with HVIL		PRC182U-60-10	PRC60A 2pos sperated Plug, Key U, 10mm^2,w/o HVIL	
PRC182V-61-10	PRC60A 2pos sperated Plug, Key V, 10mm^2,with HVIL		PRC182V-60-10	PRC60A 2pos sperated Plug, Key V, 10mm^2,w/o HVIL	

No.	Part Name	Material	QTY
15	PP	PP	1
14	Plastic button	PA66	1
13	Pressing Spring	Stainless Steel	1
12	Torsional Spring	Stainless Steel	1
11	Pin	Brass	1
10	Metal button	2# Zinc Alloy	1
9	Separted Plug rear Cover	PA66(Key X_Orange,Key Y_Black,Key U_Yellow,Key V_Green)	1
8	Rear sealing part	Flame Retardant Silicone Rubber Orange (10mm^2)	1
7	Shielding part 1	Aluminium Alloy	1
6	Shielding part 2	Aluminium Alloy	1
5	Terminal	Red copper	2
4	Plug inner plastic part	PBT(Key X_Orange,Key Y_Black,Key U_Yellow,Key V_Green)	1
3	HVIL contact	Beryllium copper	1
2	Plug shell	5# Zinc Alloy	1
1	Sealing ring	FKM Black	1

BALE		Chengdu City Bale New Energy Technology Co. Ltd			
		WEIGHT	MATERIAL: /		PART NAME: PRC60A 2 POS SEPRATED PLUG
SIGNATURE		DATE	SHEET	No tolerance(mm):	CUST P/N: SEE TABLE
DRAWN	W.FS		2/3	x.: ±1.0 x..: ±0.5 x...: ±0.2	
CHECKED	M.D		ANGLE OF VIEW	Angle: ±2°	DWG NO: PRC182-61
APPROVAL	M.D				

THE COPYRIGHT BELONGS TO BALE

REVISIONS					
REV	ECN#	DESCRIPTION	REV.BY	APPR.BY	DATE
A1	- -	Initial release	W.FS	M.D	2023/6/2
B	ECN-2023-001	Change parameters	W.FS	M.D	2024/1/22

Terminal

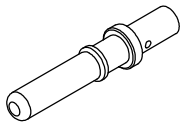

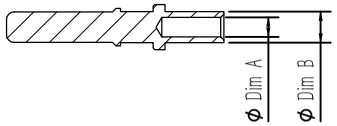

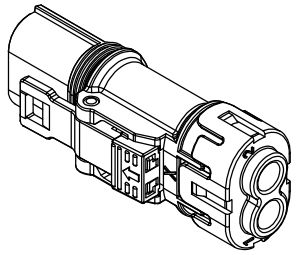

Shielding Copper Sleeve

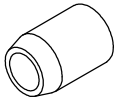

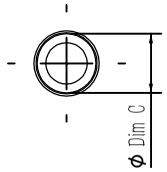

Rear Sealing Part

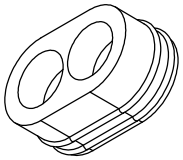

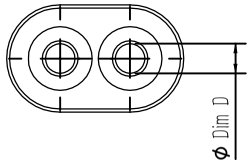

Part No.	Cable Dia.	Dim A	Dim B	Dim C	Dim D	Dim E
PRC182(X)-6(1)-2.5	5.2±0.2	2.50±0.1	4.00±0.05	5.7±0.1	3.8±0.2	5.6±0.2
PRC182(X)-6(1)-4	5.8±0.2	3.05±0.1	4.57±0.05	6.4±0.1	4.4±0.2	6.2±0.2
PRC182(X)-6(1)-6	6.7±0.3	3.80±0.1	5.80±0.05	7.3±0.1	5.3±0.2	7.2±0.2

Notes: PRC182(X)-6(1)-10 has different parts from 2.5、4、6mm^2 type, see details from Page2.

Seprated Plug Rear cover

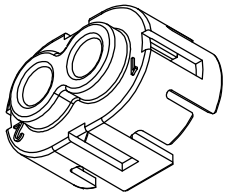

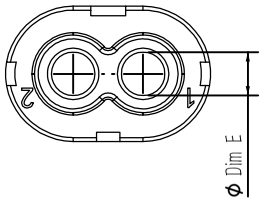

THE COPYRIGHT BELONGS TO BALE

BALE		Chengdu City Bale New Energy Technology Co. Ltd			
		WEIGHT	MATERIAL: /		PART NAME: PRC60A 2 POS SEPRATED PLUG
SIGNATURE		DATE	SHEET	No tolerance(mm):	CUST P/N: SEE TABLE
DRAWN	W.FS		3/3	x.: ±1.0 x..: ±0.5 x...: ±0.2	
CHECKED	M.D		ANGLE OF VIEW	Angle: ±2°	DWG NO: PRC182-61
APPROVAL	M.D				